KJI

NOMAD BALL HEAD

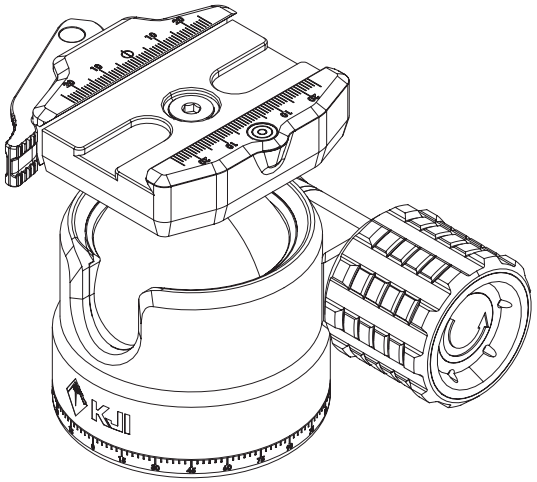



USER MANUAL

KJ86024

About KJI:

KJI delivers precision-engineered stability solutions designed to empower ambitious professionals with unshakable control and adaptability in the most demanding environments. Whether for tactical operations, long-range precision shooting, or extreme hunting, KJI products provide the confidence and reliability needed to master every shot.

www.kjitripods.com

About KJI Nomad Ball Head:

The KJI Nomad Ball Head combines smooth control and lightning-fast lockup with a heavy-duty build. Featuring adjustable tension and a flick-to-lock lever, this ARCA-compatible mount delivers 360° panning, 90° tilt, and a rock-solid hold up to 30 lbs (13.6 kg), all in a compact, field-ready design.

Feature List

- Dual control system: adjustable tension knob + flick-to-lock lever
- 40mm ball with 30 lbs (13.6 kg) max load capacity
- 360° panning and 90° tilt with single drop notch
- ARCA Swiss-compatible clamp with large clamping lever
- Top-mounted bubble level for quick leveling
- CNC-machined aluminum body with hard anodized finish
- Etched hash marks on panning base and top plate for alignment
- Square-knurled controls for gloved operation
- Split-body construction for stronger lockup under pressure
- Base mounting interface: 3/8”-16
- Includes padded storage bag for transport

Included Accessories

- Storage Bag

TECHNICAL SPECIFICATIONS	KJ86024
Ball Diameter (mm/in)	40 / 1.57
Base Diameter (mm/in)	57 / 2.24
Max Load (lbs/kg)	30 / 13.6
Base Mounting Interface (in)	3/8 - 16
Controls	Pan Knob Ball Tension Knob Ball Tension Lock Lever Clamp Lever
Clamp Type	Lever
Clamp Compatibility	Arca Swiss
Bubble Level	Yes (Top)
Panning Range (degrees)	360˚
Tilt Range (degrees)	90˚
Body material	Aluminum
Finish/color	Anodize - Black
Length (mm/in)	107 / 4.21
Width (mm/in)	95 / 3.75
Height (mm/in)	87 / 3.42
Weight (lbs/kg)	1.1 / 0.49

Components Diagram:

1. Main Locking Knob
2. Mounting Base
3. 3/8”-16 Threaded Mounting Interface
4. Main Body
5. Arca Swiss Mounting Platform
6. Anti Slide Grooves
7. QD Lever
8. QD Lever Tension Screw
9. Quarter Turn Locking Lever
10. Rotation Tension Knob
11. Drop Notch

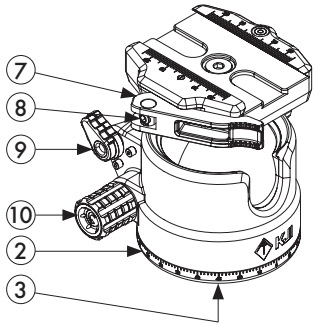

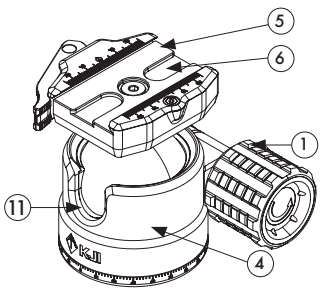

Operation:

Mounting the Nomad Ball Head:

To attach the Nomad Ball Head to a tripod or support device, line up the 3/8”-16 threaded socket on the base with a matching male stud. Screw it on by hand until it’s snug, then tighten the rotation locking knob. Once secure, give the whole unit a firm twist to lock it in place.



Mounting Devices:

To mount a device, flip the QD lever (7) away from the ball head to open the Arca clamp. Slide your Arca-compatible device into the top of the mount. Press the lever firmly until it locks.

If the lever closes too easily or the device feels loose, use the included hex key to adjust the tension screw inside the lever. Open the lever, tighten the screw slightly, then try again. Repeat until the mount locks firmly and your device doesn’t shift.

If your device has anti-slide screws on the bottom, they’ll align with the machined grooves in the Arca clamp to prevent slipping.





Using the Main Locking Knob:

Turn the main tension knob (1) to adjust how loose or tight the ball head feels.
- Clockwise locks it in place.
- Counterclockwise loosens it for smooth movement.



Using the Locking Lever:

First, set your preferred tension with the main knob. Then use the locking lever (9) to lock and unlock the ball head quickly:
- Push the lever forward to lock.
- Pull it back to unlock and return to your preset tension.

Using the Rotation Knob:

The base of the Nomad rotates. Use the rotation knob (10) to control it:
- Turn clockwise to lock the base.
- Turn counterclockwise to allow smooth panning.



Using the Drop Notch:

Rotate the ball into the drop notch on the front of the mount. It'll let your gear aim a full 90 degrees downward.





Maintenance:

Storage

To ensure that your Nomad Ball Head mount always stays in prime working condition, remove all mounts prior to storage. Once the Nomad Ball Head is no longer installed on a support device, insert the ball head into the supplied storage/carry bag.

Cleaning

To clean the Nomad Ball Head, wipe down with a damp cloth. Mild detergent may be used if the mount is very dirty. No lubricants or special cleaners are necessary.

Warnings

Do not exceed the maximum load capacity of the device.
Make sure that all mounting hardware is tight prior to use.
Avoid hitting or dropping the unit.

For any issues or assistance that might be needed please contact the KJI customer service team.

Proper authorization is required before shipping any product back to KJI. Failure to obtain authorization could result in your product being returned to the wrong address, lost, or damaged.
KJI is not liable for products returned without authorization.

KJI is a trademark of Sellmark Corporation, all rights reserved.
All trademarks and registered trademarks
are the property of their respective owners.
KJI, 2201 Heritage Pkwy Mansfield, TX 76063

Manufactured for Sellmark Corporation.
In EU, distributed by Sellmark OOD
104 A Akademik Ivan E.Geshov Blvd, Floor 4, Office 6, 1612 Sofia, Bulgaria

KJI Warranty
Please visit www.kjitripods.com for warranty details and information.