KJI

Titan Inverted Ball Head

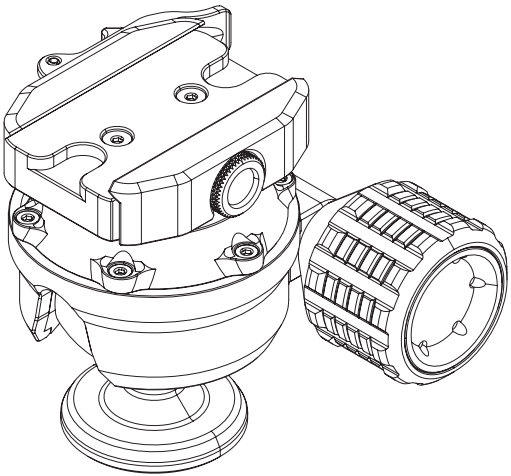







USER MANUAL

KJ86025

About KJI:

KJI delivers precision-engineered stability solutions designed to empower ambitious professionals with unshakable control and adaptability in the most demanding environments. Whether for tactical operations, long-range precision shooting, or extreme hunting, KJI products provide the confidence and reliability needed to master every shot.

About KJI Titan Inverted Ball Head:

The KJI Titan Ball Head is built for shooters who want maximum strength with minimal fuss. Featuring a single rotating tension knob and a locking ARCA clamp, the Titan ditches complexity in favor of intuitive, foolproof controls, holding up to 60 lbs (27.2 kg) with 360° pan, 90° tilt, and a no-nonsense user experience.

Feature List

- Minimalist dual-control design: one tension knob, one locking clamp
- 60mm ball supports up to 60 lbs (27.2 kg) of rifles, optics, or gear
- Tension knob rotates with the ball for always-accessible adjustment
- ARCA Swiss-compatible clamp with large 1/4-turn locking lever
- 360° panning and 90° tilt with front drop notch
- Etched hash marks on panning base and top plate for repeatable alignment
- CNC-machined split-body aluminum for superior clamp strength
- Hard anodized black finish resists wear and corrosion
- Top-mounted bubble level for quick leveling
- Standard 3/8”-16 tripod base mount
- Includes padded storage bag for transport

Included Accessories

- Storage Bag

TECHNICAL SPECIFICATIONS	KJ86025
Ball Diameter (mm/in)	60 / 2.3
Base Diameter (mm/in)	72 / 2.83
Max Load (lbs/kg)	60 / 27.2
Base Mounting Interface (in)	3/8 - 16
Controls	Pan Knob Ball Tension Knob Ball Tension Lock Lever Clamp Lever
Clamp Type	Lever
Clamp Compatibility	Arca Swiss
Bubble Level	Yes (Top)
Panning Range (degrees)	360˚
Tilt Range (degrees)	90˚
Body material	Aluminum
Finish/color	Anodize - Black
Length (mm/in)	115 / 4.52
Width (mm/in)	113 / 4.44
Height (mm/in)	100 / 3.93
Weight (lbs/kg)	2 / 0.91

Components Diagram:

1. Main Locking Knob
2. Inverted Ball with Mounting Base
3. 3/8”-16 Threaded Mounting Base
4. Main Body
5. Arca Swiss Mounting Platform
6. Anti Slide Grooves
7. QD Lever
8. QD Lever Lock Release
9. QD Lever Tension Screw
10. Drop Notch

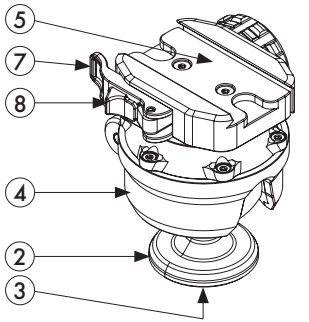

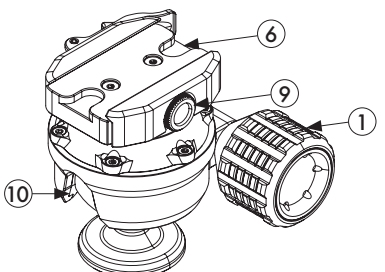

Operation:

Mounting the Titan Inverted Ball Head:

Attach the Titan to your tripod or support device using the 3/8”-16 threaded socket at the base. Screw it onto a matching male stud until it’s hand-tight, then secure it by tightening the main locking knob. Once the top body is tight to the ball, twist to fully tighten the ball head to the support device.



Mounting Devices:

Note that the Titan Inverted Ball Head is only compatible with Arca Swiss or Picatinny rails. To mount a device:

1. Pull the lock release tab to unlock the QD lever.
2. Pivot the QD lever away from the ball head to open the Arca clamp.
3. Insert your Arca-compatible device into the mount.
4. Close the QD lever back toward the body. It will feel harder to move as it locks.
5. The release tab will click back into place when fully locked.



If the device feels loose or the lever closes too easily, open the QD lever and tighten the tension screw (turn it clockwise) until the mount holds firm and doesn’t shift.
Devices with anti-slide screws will align with the grooves machined into the Arca mount to prevent movement.

Using the Main Locking Knob:

Turn the main locking knob (1) to adjust the ball tension:

- Clockwise to lock it in place
- Counterclockwise to loosen it for full movement



Using the Drop Notch:

To point your device straight down, rotate it into the drop notch at the front of the ball head. This allows for a full 90° downward angle.



Maintenance:

Storage

To ensure that your Titan Inverted Ball Head mount always stays in prime working condition, remove all mounts removed prior to storage. Once the Titan Inverted Ball Head is no longer installed on a support device, insert the Titan into the supplied storage/carry bag.

Cleaning

To clean the Titan Inverted Ball Head, wipe down with a damp cloth. Mild detergent may be used if the mount is very dirty. No lubricants or special cleaners are necessary.

To fully disassemble the ball head for cleaning:

1. Remove the two screws securing the Arca mount and take it off.
2. With the mount removed, access and remove the six screws holding the top cover in place.
3. Loosen the main tension knob, then carefully slide the top cover and ball assembly out of the main body.
4. Clean all components as needed, then reverse the steps to reassemble.

Warnings

Do not exceed the maximum load capacity of the device.
Make sure that all mounting hardware is tight prior to use.
Avoid hitting or dropping the unit.

For any issues or assistance that might be needed please contact the KJI customer service team.

Proper authorization is required before shipping any product back to KJI. Failure to obtain authorization could result in your product being returned to the wrong address, lost, or damaged.
KJI is not liable for products returned without authorization.

KJI is a trademark of Sellmark Corporation, all rights reserved.
All trademarks and registered trademarks
are the property of their respective owners.
KJI, 2201 Heritage Pkwy Mansfield, TX 76063

Manufactured for Sellmark Corporation.
In EU, distributed by Sellmark OOD
104 A Akademik Ivan E.Geshov Blvd, Floor 4, Office 6, 1612 Sofia, Bulgaria

KJI Warranty
Please visit www.kjitripods.com for warranty details and information.